# EE105 - Spring 2007
# Microelectronic Devices and Circuits

Lecture 11
Bipolar Amplifiers (Part 2)

## Common Base (CB) Amplifier

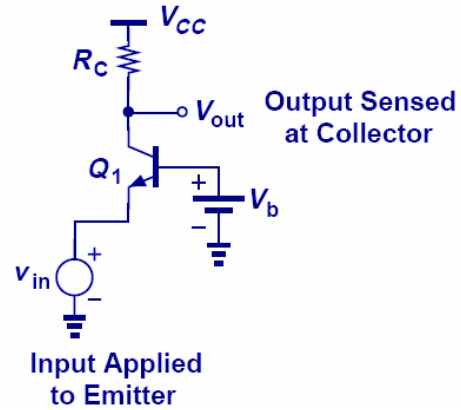


- In common base topology, where the base terminal is biased with a fixed voltage, emitter is fed with a signal, and collector is the output.



## CB Core

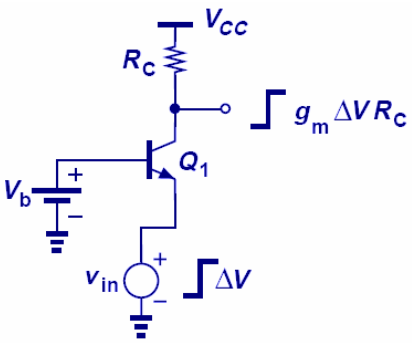


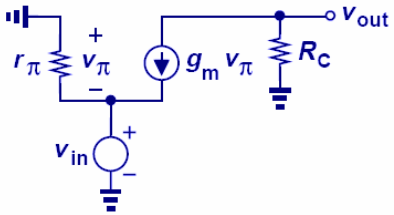


- The voltage gain of CB stage is $g_mR_C$, which is identical to that of CE stage in magnitude and opposite in phase.



## Tradeoff between Gain and Headroom

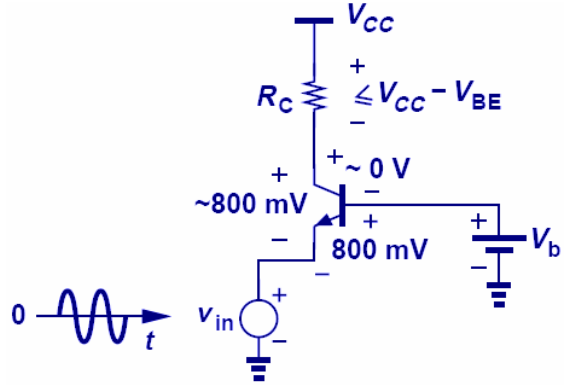


$$A_v = \frac{I_C}{V_T}.R_C = \frac{V_{CC} - V_{BE}}{V_T}$$

- To maintain the transistor out of saturation, the maximum voltage drop across $R_C$ cannot exceed $V_{CC}$-$V_{BE}$.

## Simple CB Example

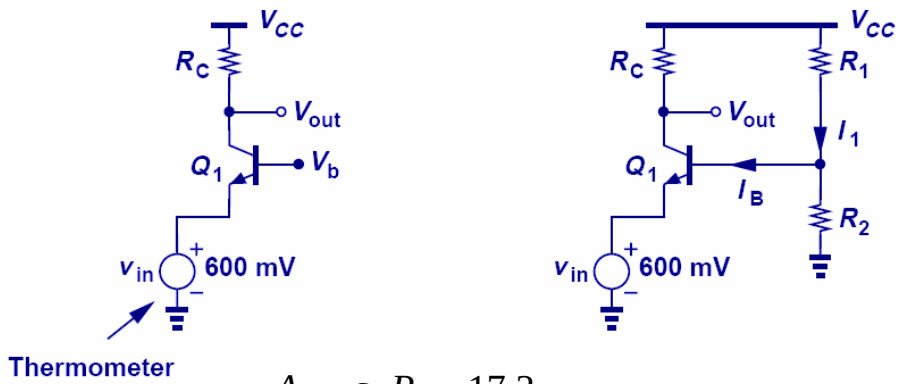


$$A_v = g_m R_C = 17.2$$
$$R_1 = 22.3K\Omega$$
$$R_2 = 67.7K\Omega$$



## Input Impedance of CB

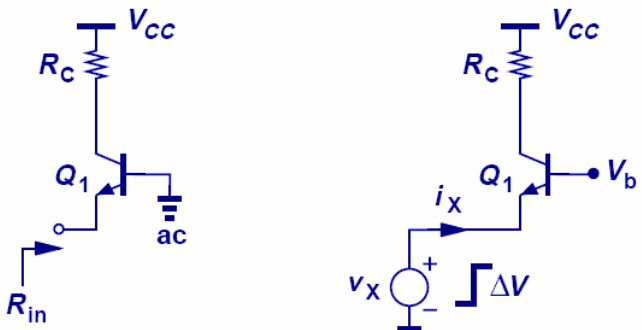


$$R_{in} = \frac{1}{g_m}$$

- The input impedance of CB stage is much smaller than that of the CE stage.



## Practical Application of CB Stage

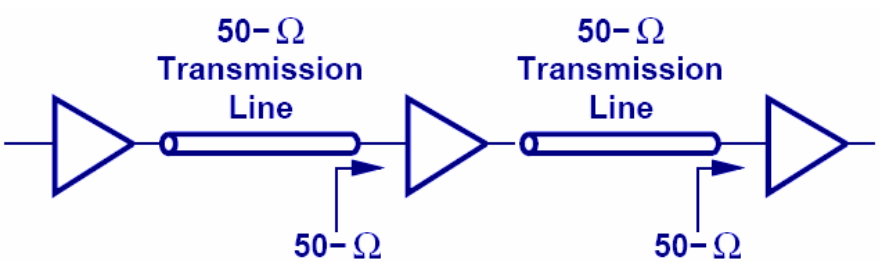


- To avoid "reflections", need impedance matching.
- CB stage's low input impedance can be used to create a match with 50 **Ω**.



## Output Impedance of CB Stage

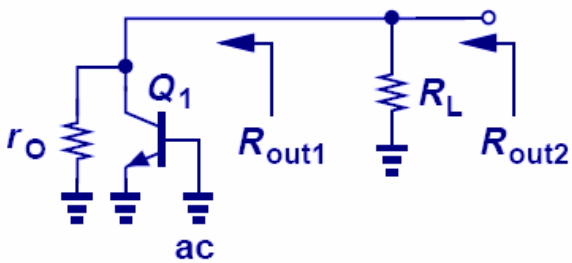


$$R_{out} = r_O \parallel R_L$$

- The output impedance of CB stage is similar to that of CE stage.

## CB Stage with Source Resistance

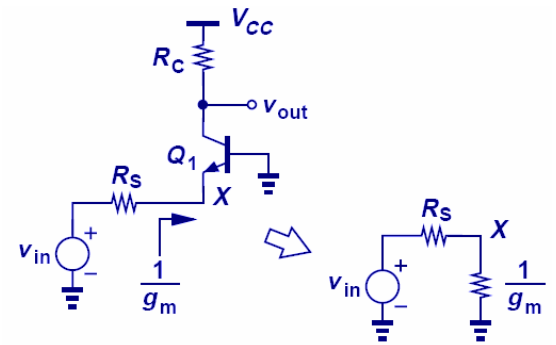


$$A_v = \frac{R_C}{\frac{1}{g_m} + R_S}$$

- With an inclusion of a source resistor, the input signal is attenuated before it reaches the emitter of the amplifier; therefore, we see a lower voltage gain.
- This is similar to CE stage emitter degeneration; only the phase is reversed.



## Practical Example of CB Stage

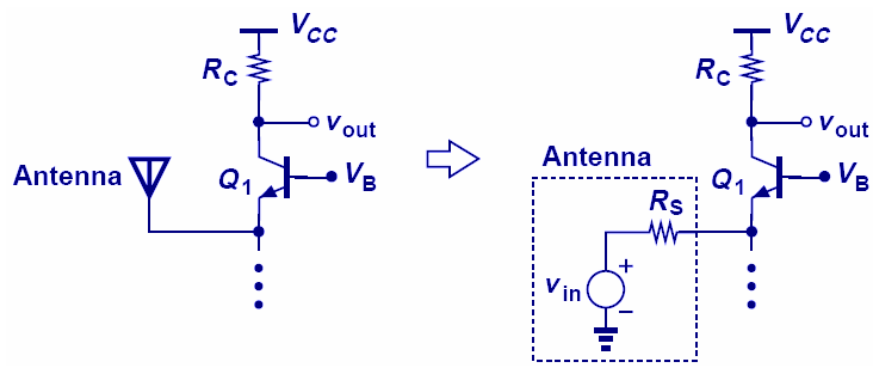


- An antenna usually has low output impedance; therefore, a correspondingly low input impedance is required for the following stage.



## Realistic Output Impedance of CB Stage

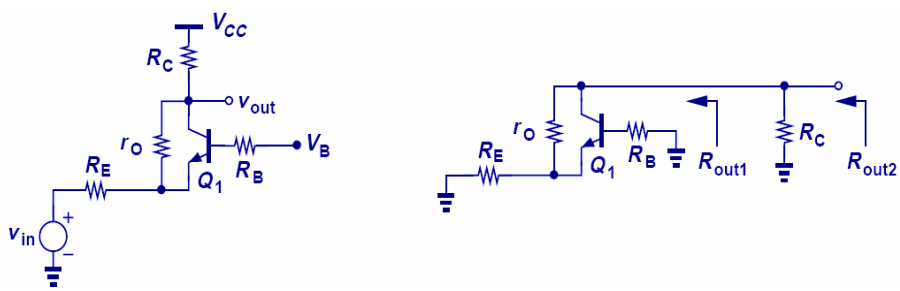


$$R_{out1} = \left[1 + g_m (R_E \parallel r_\pi)\right] r_O + \left(R_E \parallel r_\pi\right)$$
$$R_{out} = R_C \parallel R_{out1}$$

- The output impedance of CB stage is equal to $R_C$ in parallel with the impedance looking down into the collector.



## Output Impedance of CE and CB Stages

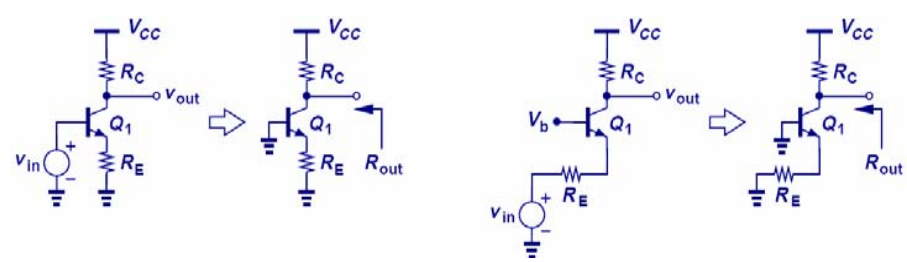


- The output impedances of CE, CB stages are the same if both circuits are under the same condition. This is because when calculating output impedance, the input port is grounded, which renders the same circuit for both CE and CB stages.

## Fallacy of the "Old Wisdom"

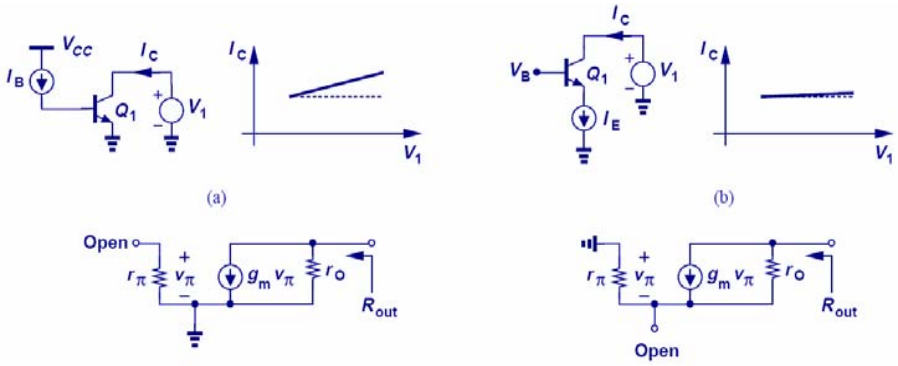


- The statement "CB output impedance is higher than CE output impedance" is flawed.



## CB with Base Resistance

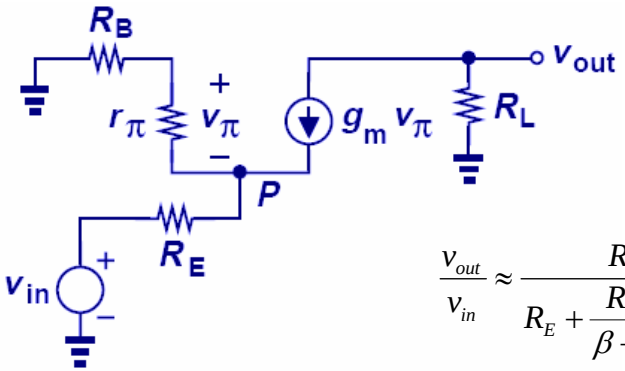


$$\frac{v_{out}}{v_{in}} \approx \frac{R_C}{R_E + \frac{R_B}{\beta+1} + \frac{1}{g_m}}$$

- With an addition of base resistance, the voltage gain degrades.



## Comparison of CE and CB Stages with Base Resistance

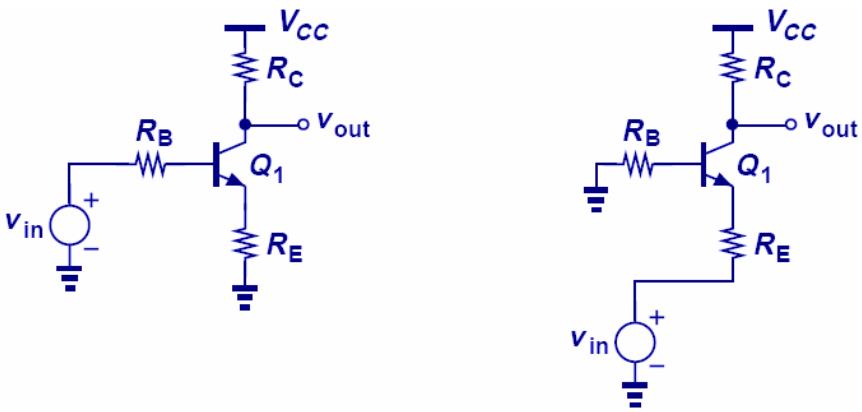


- The voltage gain of CB amplifier with base resistance is exactly the same as that of CE stage with base resistance and emitter degeneration, except for a negative sign.



## Input Impedance of CB Stage with Base Resistance

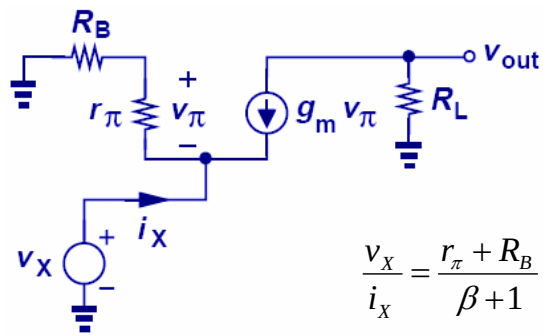


$$\frac{v_X}{i_X} = \frac{r_\pi + R_B}{\beta+1} \approx \frac{1}{g_m} + \frac{R_B}{\beta+1}$$

- The input impedance of CB with base resistance is equal to $1/g_m$ plus $R_B$ divided by ($\beta$+1). This is in contrast to degenerated CE stage, in which the resistance in series with the emitter is multiplied by ($\beta$+1) when seen from the base.

## Input Impedance Seen at Emitter and Base

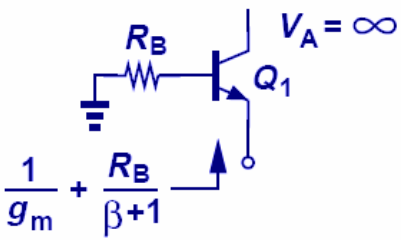


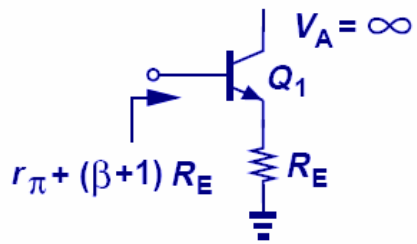




## Input Impedance Example

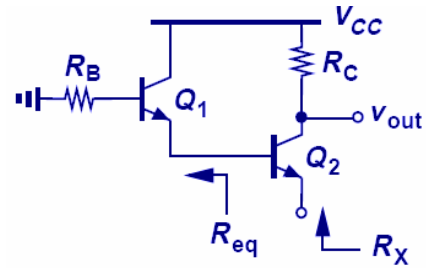


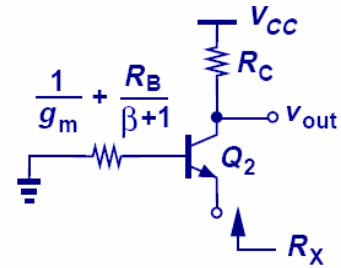


$$R_X = \frac{1}{g_{m2}} + \frac{1}{\beta+1}\left(\frac{1}{g_{m1}} + \frac{R_B}{\beta+1}\right)$$

- To find the $R_X$, we have to first find $R_{eq}$, treat it as the base resistance of $Q_2$ and divide it by ($\beta$+1).



## Bad Bias Technique for CB Stage

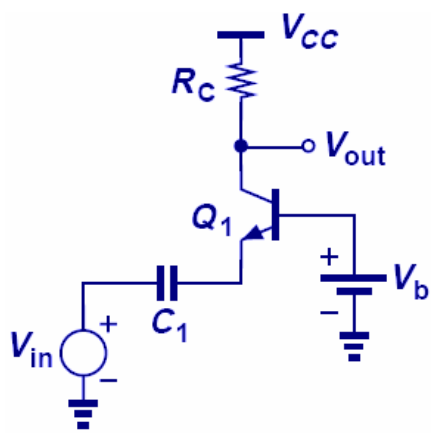


- Unfortunately, no emitter current can flow.



## Still No Good

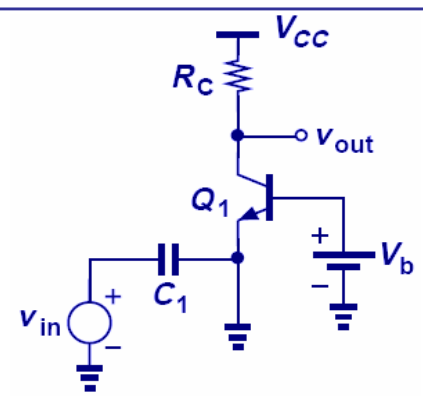


- The input signal is shorted to ground. The circuit still does not amplify.

## Proper Biasing for CB Stage

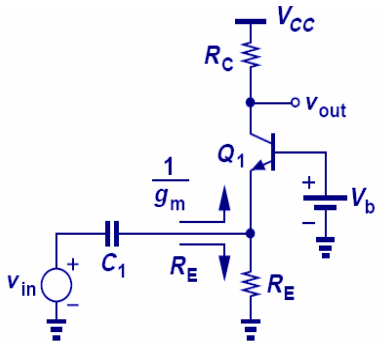


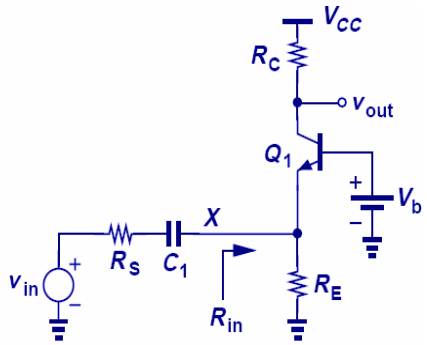


$$R_{in} = \frac{1}{g_m} \| R_E$$

$$\frac{v_{out}}{v_{in}} = \frac{1}{1+(1+g_m R_E)\frac{R_S}{R_E}} g_m R_C$$



## Reduction of Input Impedance Due to RE

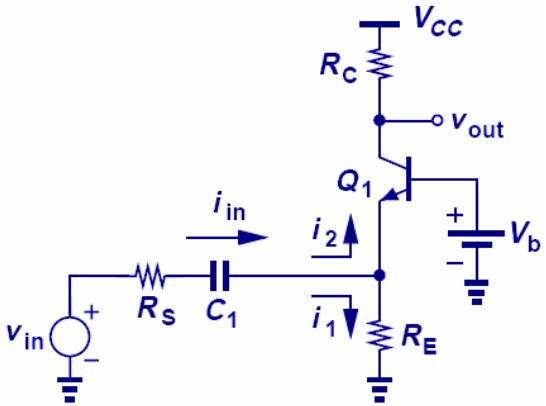


- The reduction of input impedance due to $R_E$ is bad because it shunts part of the input current to ground instead of to $Q_1$ (and $R_C$) .



## Creation of $V_b$

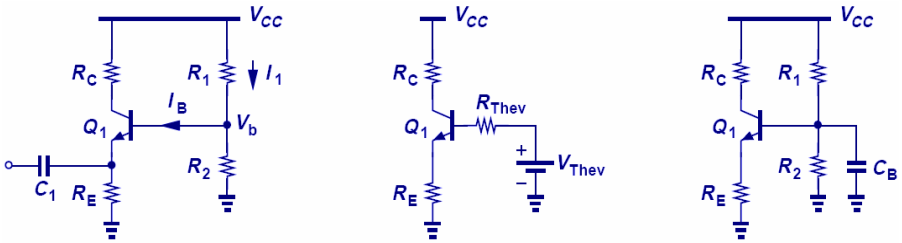


- Resistive divider lowers the gain.
- To remedy this problem, a capacitor is inserted from base to ground to short out the resistor divider at the frequency of interest.



## Example of CB Stage with Bias

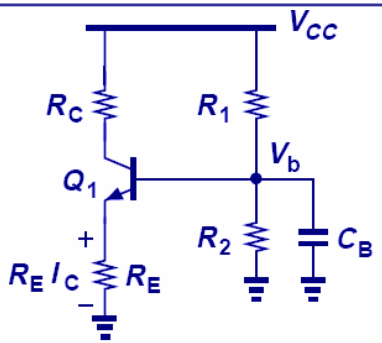


- For the circuit shown above, $R_E >> 1/g_m$.
- $R_1$ and $R_2$ are chosen so that $V_b$ is at the appropriate value and the current that flows thru the divider is much larger than the base current.
- Capacitors are chosen to be small compared to $1/g_m$ at the required frequency.

## Emitter Follower (Common Collector Amplifier)

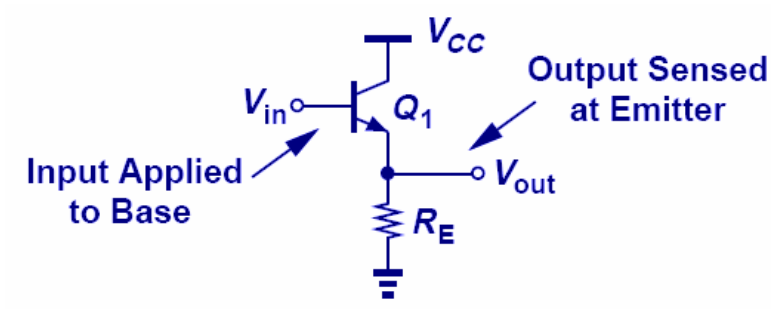




## Emitter Follower Core

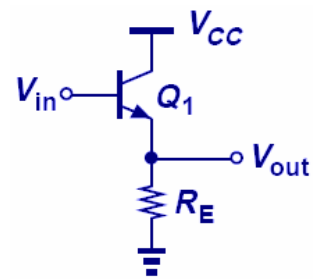


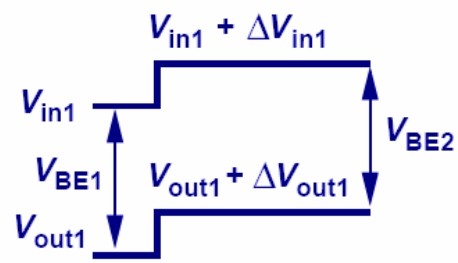


- When the input is increased by ΔV, output is also increased by an amount that is less than ΔV due to the increase in collector current and hence the increase in potential drop across $R_E$.
- However the absolute values of input and output differ by a $V_{BE}$.



## Small-Signal Model of Emitter Follower

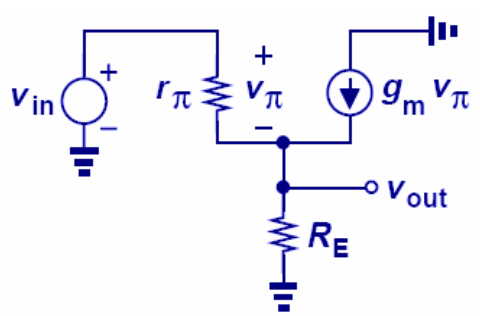


$$V_A = \infty$$

$$\frac{v_{out}}{v_{in}} = \frac{1}{1 + \frac{r_\pi}{\beta+1} \cdot \frac{1}{R_E}} \approx \frac{R_E}{R_E + \frac{1}{g_m}}$$

- As shown above, the voltage gain is less than unity and positive.



## Unity-Gain Emitter Follower

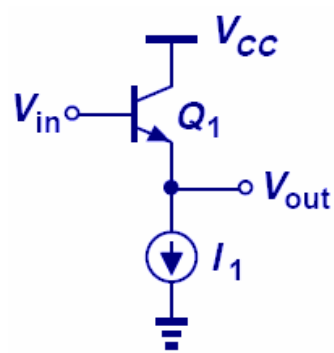


$$V_A = \infty$$

$$A_v = 1$$

- The voltage gain is unity because a constant collector current (= $I_1$) results in a constant $V_{BE}$, and hence Vout follows Vin exactly.

## Analysis of Emitter Follower as a Voltage Divider

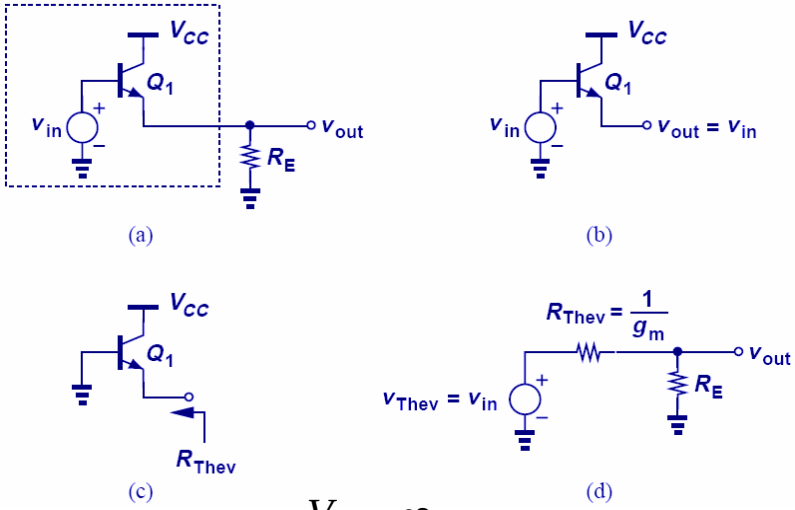


$$V_A = \infty$$



## Emitter Follower with Source Resistance

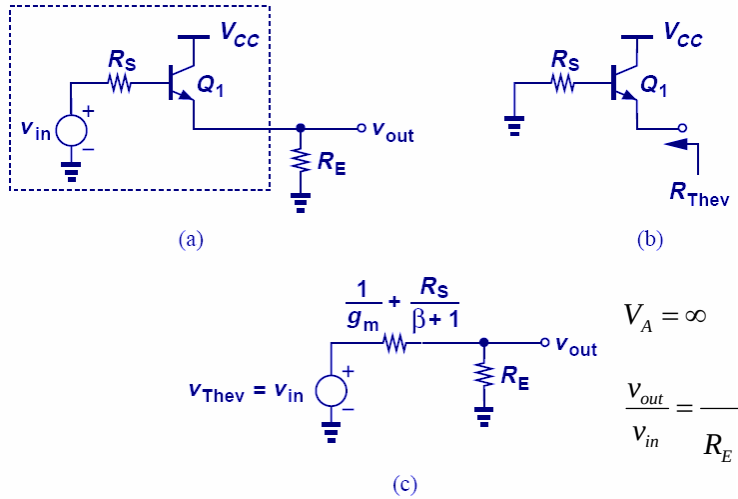


$$V_A = \infty$$

$$\frac{v_{out}}{v_{in}} = \frac{R_E}{R_E + \frac{R_S}{\beta+1} + \frac{1}{g_m}}$$



## Input Impedance of Emitter Follower

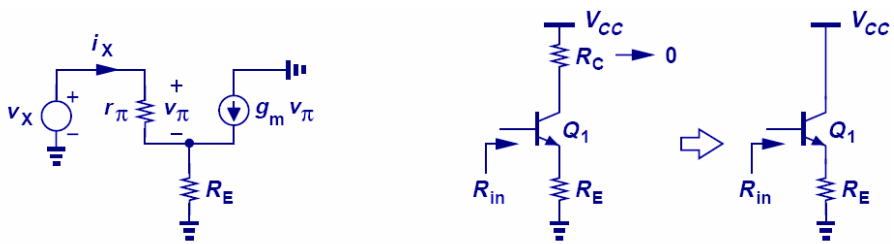


$$V_A = \infty$$

$$\frac{v_X}{i_X} = r_\pi + (1+\beta)R_E$$

- The input impedance of emitter follower is exactly the same as that of CE stage with emitter degeneration. This is not surprising because the input impedance of CE with emitter degeneration does not depend on the collector resistance.



## Emitter Follower as Buffer

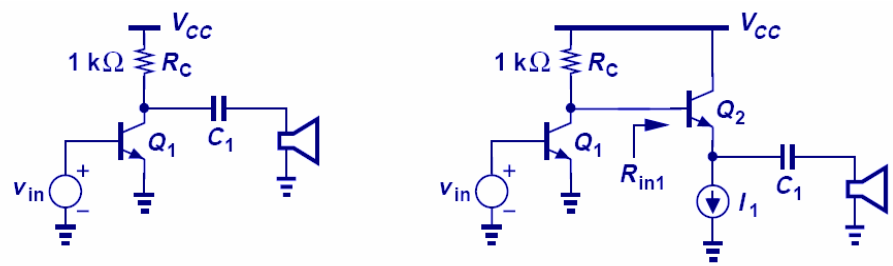


- Since the emitter follower increases the load resistance to a much higher value, it is suited as a buffer between a CE stage and a heavy load resistance to alleviate the problem of gain degradation.

## Output Impedance of Emitter Follower

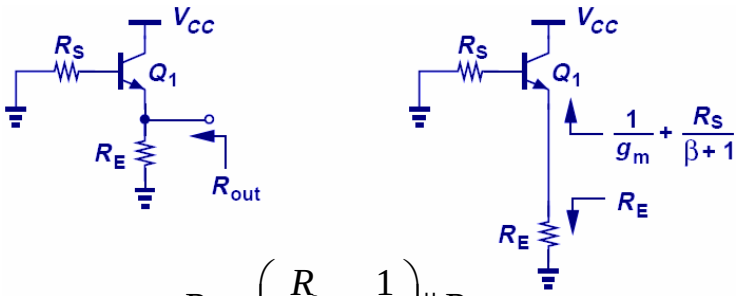


$$R_{out} = \left(\frac{R_s}{\beta+1} + \frac{1}{g_m}\right) \| R_E$$

- Emitter follower lowers the source impedance by a factor of β+1 → improved driving capability.



## Emitter Follower with Early Effect

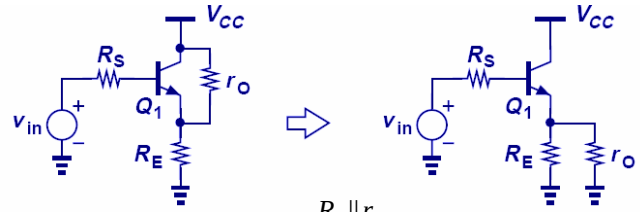


$$A_v = \frac{R_E \| r_O}{R_E \| r_O + \frac{R_S}{\beta+1} + \frac{1}{g_m}}$$

$$R_{in} = r_\pi + (\beta+1)(R_E \| r_O)$$

$$R_{out} = \left(\frac{R_s}{\beta+1} + \frac{1}{g_m}\right) \| R_E \| r_O$$

- Since $r_O$ is in parallel with $R_E$, its effect can be easily incorporated into voltage gain and input and output impedance equations.



## Current Gain

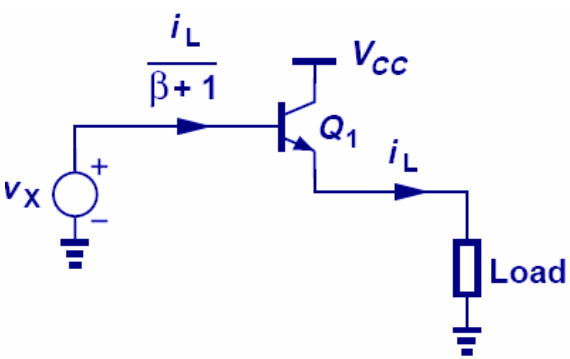


- There is a current gain of (β+1) from base to emitter.
- Effectively speaking, the load resistance is multiplied by (β+1) as seen from the base.



## Emitter Follower with Biasing

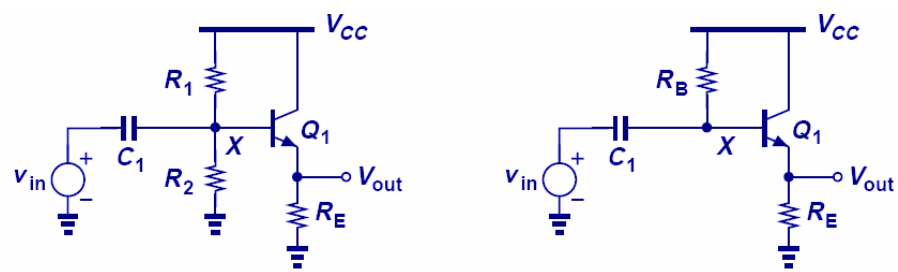


- A biasing technique similar to that of CE stage can be used for the emitter follower.
- Also, $V_b$ can be close to $V_{cc}$ because the collector is also at $V_{cc}$.

## Supply-Independent Biasing

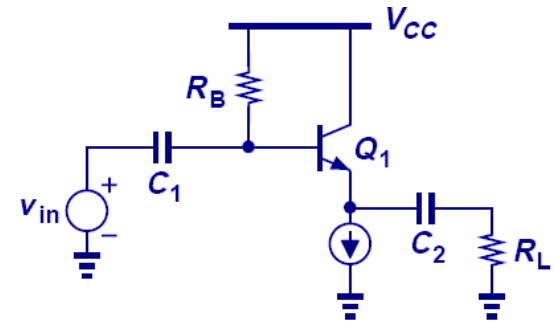


- By putting a constant current source at the emitter, the bias current, $V_{BE}$, and $I_BR_B$ are fixed regardless of the supply value.



## Summary of Amplifier Topologies

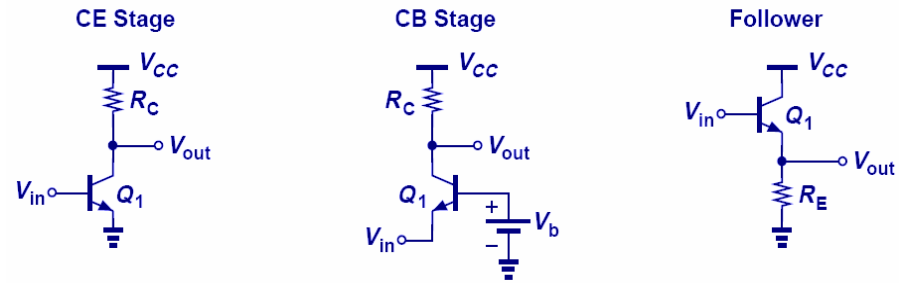


- The three amplifier topologies studied so far have different properties and are used on different occasions.
- CE and CB have voltage gain with magnitude greater than one, while follower's voltage gain is at most one.



## Amplifier Example I

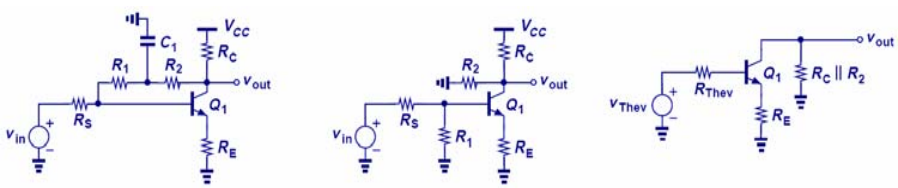


$$\frac{v_{out}}{v_{in}} = -\frac{R_2 \| R_C}{\frac{R_1 \| R_S}{\beta+1} + \frac{1}{g_m} + R_E} \cdot \frac{R_1}{R_1 + R_S}$$

- The keys in solving this problem are recognizing the AC ground between $R_1$ and $R_2$, and Thevenin transformation of the input network.



## Amplifier Example II

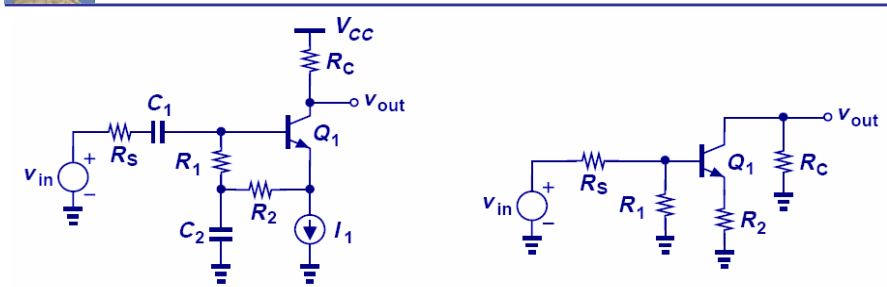


$$\frac{v_{out}}{v_{in}} = -\frac{R_C}{\frac{R_S \| R_1}{\beta+1} + \frac{1}{g_m} + R_2} \cdot \frac{R_1}{R_1 + R_S}$$

- Again, AC ground/short and Thevenin transformation are needed to transform the complex circuit into a simple stage with emitter degeneration.

# Amplifier Example III

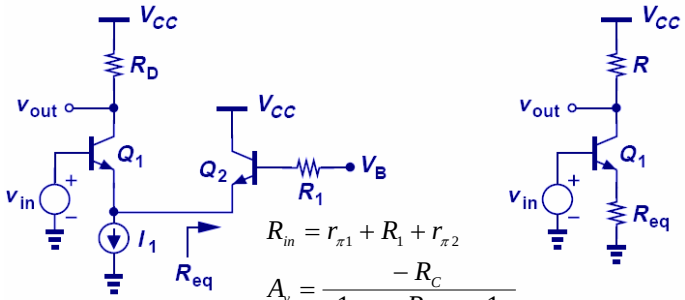


$$R_{in} = r_{\pi 1} + R_1 + r_{\pi 2}$$

$$A_v = \frac{-R_C}{\frac{1}{g_{m1}} + \frac{R_1}{\beta+1} + \frac{1}{g_{m2}}}$$

- The key for solving this problem is first identifying $R_{eq}$, which is the impedance seen at the emitter of $Q_2$ in parallel with the infinite output impedance of an ideal current source. Second, use the equations for degenerated CE stage with RE replaced by $R_{eq}$.



# Amplifier Example IV

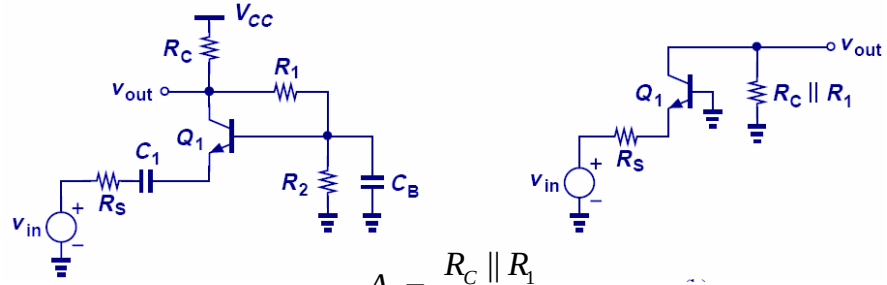


$$A_v = \frac{R_C \| R_1}{R_S + \frac{1}{g_m}}$$

- The key for solving this problem is recognizing that CB at frequency of interest shorts out R2 and provide a ground for R1.
- R1 appears in parallel with RC and the circuit simplifies to a simple CB stage.



# Amplifier Example V

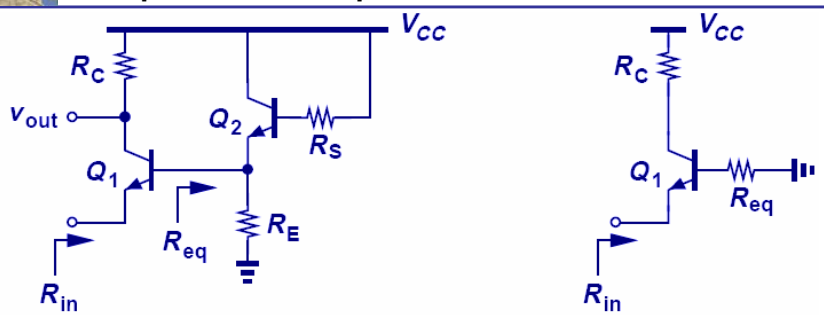


$$R_{in} = \frac{1}{\beta+1}\left[\left(\frac{R_B}{\beta+1} + \frac{1}{g_{m2}}\right) \| R_E\right] + \frac{1}{g_{m1}}$$

- The key for solving this problem is recognizing the equivalent base resistance of $Q_1$ is the parallel connection of RE and the impedance seen at the emitter of $Q_2$.



# Amplifier Example VI

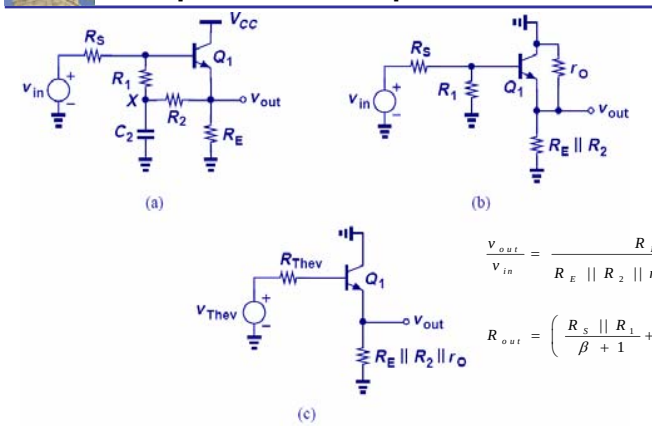


$$\frac{v_{out}}{v_{in}} = \frac{R_E \| R_2 \| r_O}{R_E \| R_2 \| r_O + \frac{1}{g_m} + \frac{R_S \| R_1}{\beta+1}} \cdot \frac{R_1}{R_1 + R_S}$$

$$R_{out} = \left(\frac{R_S \| R_1}{\beta+1} + \frac{1}{g_m}\right) \| R_E \| R_2 \| r_O$$

- The key in solving this problem is recognizing a DC supply is actually an AC ground and using Thevenin transformation to simplify the circuit into an emitter follower.

# Amplifier Example VII

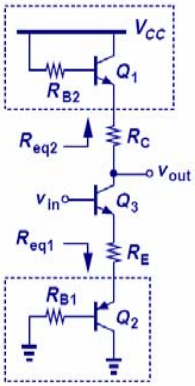


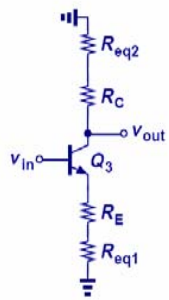


$$R_{in} = r_{\pi 1} + (\beta + 1)\left( R_E + \frac{R_{B1}}{\beta + 1} + \frac{1}{g_{m2}} \right)$$

$$R_{out} = R_C + \frac{R_{B2}}{\beta + 1} + \frac{1}{g_{m3}}$$

$$A_v = -\frac{R_C + \frac{R_{B2}}{\beta + 1} + \frac{1}{g_{m3}}}{\frac{R_{B1}}{\beta + 1} + \frac{1}{g_{m2}} + \frac{1}{g_{m1}}}$$

- Impedances seen at the emitter of $Q_1$ and $Q_2$ can be lumped with $R_C$ and $R_E$, respectively, to form the equivalent emitter and collector impedances.